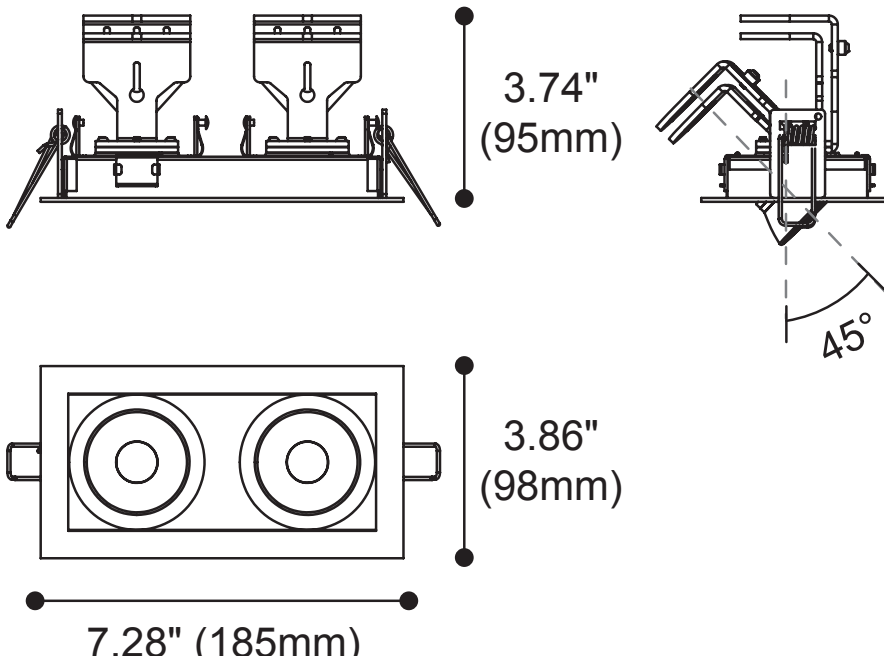
3.74"
(95mm)
45°
3.86"
(98mm)
7.28" (185mm)